PAGE 57

Microfibres

How our washing machines are creating an invisible pollution time bomb

PAGE 65

Garden tools guide

Why it's time to ditch your petrol-driven tools and embrace the battery

WIN

PAGE 77

$5000 in Victron Energy premium solar equipment

Sponsored by Commodore Australia

Australian residents only

ISSUE 155

renew.

Technology for a sustainable future

Into the e-wastes:

The poisonous legacy of our digital age

APR - JUN
2021

ISSN 1327-1938

AU/NZ $9.90
RENEW.ORG.AU

renew.

Technology for a sustainable future

ISSUE 155

Apr–Jun 2021

Publisher:
Alternative Technology Association trading as Renew Australia

Editor:
Tom Hawking

Technical editor:
Lance Turner

Advertising:
Mohit Gulati

Editorial and production assistance:
Anna Cumming, Jodie Lea Martire, Sophie Weiner

Contributors:
Lucinda Flynn, Bryce Gaton, Olivia Harris, John Hermans, Julie de Jong, Barry Lambert, Alan Leenaerts, Oliver Lees, Jodie Lea Martire, Rob McLeod, Alan Pears, Antonios Sarhanis, Kim Thomson

Special thanks:
Pieter Hugo, Little Nep

Contributions are welcome; guidelines at renew.org.au/renewmag or on request. Next editorial copy deadline: **30 April 2021**.

Advertising
Available for products and services relevant to our audience. We reserve the right to refuse, cancel and withdraw advertising at our discretion. We keep a strict wall between advertising and the editorial side of our content. For enquiries, email adverts@renew.org.au or call (03) 9631 5412.

Next advertising deadlines:
- Booking: **8 June 2021**
- Advertising copy: **10 June 2021**

A few days ago, an article did the rounds of my Facebook friends. It was about the fact that, along with various other substances, one of the things that used to be used as fake snow on Christmas toys and such things was ... white asbestos. (It was apparently also used for the same purpose on early movie sets, including that of *The Wizard of Oz*.)

Anyway, in the accompanying comments, someone asked a thought-provoking question: what's the apparently mundane aspect of today's world on which future generations will look back with horror? What's the asbestos snow of 2021?

Another recent article—this time by Erin Brockovitch, the activist and whistleblower played by Julia Roberts in the 2000 film of the same name—suggested an answer. In the article—published in the *Guardian* in mid-March—Brockovich discusses a series of studies by epidemiologist Shanna Swan, which have formed the basis of Swan's new book *Count Down*. Swan's research has found that global sperm counts have decreased 60% since 1973 and are continuing to decline. In fact, her projections suggest that if they continue on their current trajectory, sperm counts will reach zero by 2045—and if *that* prediction is true, we needn't worry about what future generations will think, because there won't *be* any future generations.

The studies suggest that, *inter alia*, the blame may lie with a series of chemicals known as PFAs—per- and poly-fluoroalkyl substances, which are basically highly fluorinated carbon chains that until fairly recently formed the basis of many useful inventions (such as Scotchgard and Teflon.)

Tom Hawking
Renew magazine editor

It's unclear how long the adverse effects of these substances have been known, or at least suspected. As in many similar situations, the companies responsible for the products that made use of PFAs—3M and DuPont are the most prominent—insisted publicly that the substances were safe, while also quietly phasing out their use. No-one knows how many other substances there are out there like PFAs, substances that underpin popular products and whose adverse effects only become known to the public after many years of use. And no-one knows what they're doing to us.

I mention this because one article in this issue of *Renew*—Kim Thomson's feature on plastic microfibres—addresses just how difficult it can be to notice such pollutants, let alone deal with them. Our cover feature, by Jodie Lea Martire, also touches on a similar issue: the way in which wealthy countries often try to dump waste—and its attendant pollutants—onto poorer ones.

It almost feels redundant to say that we will destroy ourselves as a race unless we stop prioritising profit over safety—but I'll say it anyway. It is foolish to trust public safety to entities whose one and only *raison d'être* is the production of profit—and all the innovations in the world will be no consolation if there's no-one to use them.

Printed by Ovato using environmental best practice and FSC® certified stock. Distributed in Australia and New Zealand by Ovato.

RRP $9.90 (Aus/NZ)

Registered for posting by Aust Post: No VBG 4172

ISSN 1327-1938 Reg. No.: A0017411T ABN: 57 533 056 318

renew.

PO Box 181, Northcote, VIC 3070
Ph. (03) 9639 1500 renew.org.au

renew.

Technology for a sustainable future

FOLLOW US:

@RenewMagazine

@RenewMag

READ MORE ARTICLES:

renew.org.au/renewmag

ISSUE 155

Image: Inside Waste/Creative Commons

COVER STORY

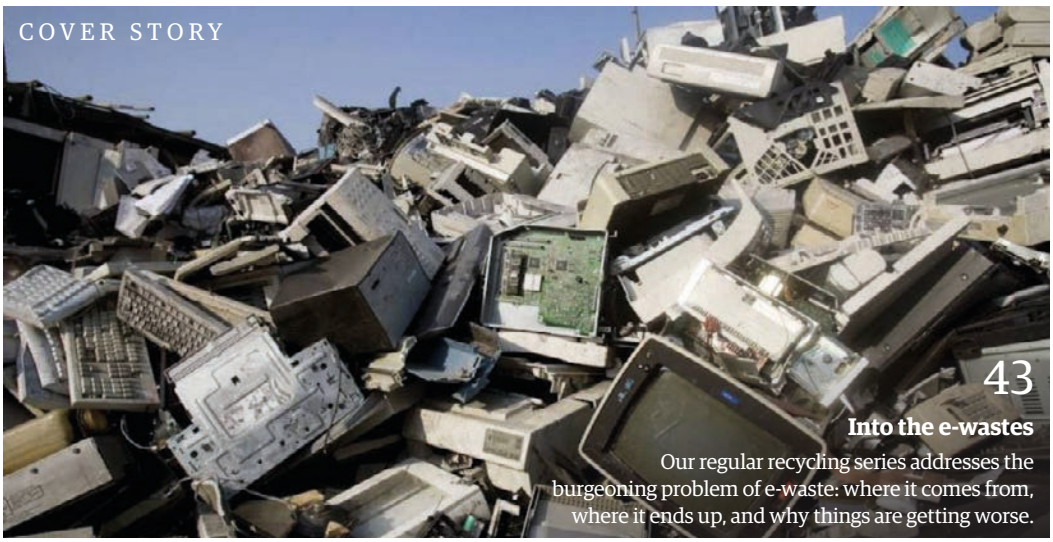

REGULARS

FEATURES

ARTICLES

PAGE 77

WIN!

$5000 worth of Victron Energy premium solar equipment

Sponsored by Commodore Australia

Australian residents only

Deadly new landmark for Australian native species

It's only been a blink of an eye in geological time since European sails first appeared on the Australian horizon, spelling disaster for the continent's inhabitants—both human and animals. But 233 years after colonisation, Australia just keeps racking up dismal landmarks.

The latest is the first known reptile to be driven to extinction since European arrival: the Christmas Island forest skink, which was declared extinct in early March. The Christmas Island pipistrelle also disappeared in the last decade, bringing the total number of extinct animal species on Christmas Island alone to eight. This places the island 28th of the 250 territories on the International Union for the Conservation of Nature (IUCN)'s global Red List in terms of having the most extinct species—above many entire countries.

The Australian mainland is in fourth place on that list, behind only the USA, French Polynesia and Mauritius: Australia-wide, more than 10% of the nation's 320 known land mammals have become extinct since 1788. We have one of the highest rates of species extinction in the world, and over 1900 flora and fauna species are listed as threatened or extinct by the federal government.

In a recent piece in *The Guardian* on the subject, conservation biologist John Woinarski noted that while the IUCN and the federal government list around 100 endemic species as now being extinct, the real figures—including invertebrates, for example—would be more than 10 times higher. (Some 50 invertebrates have been lost from Christmas Island alone for at least a century.)

A recent post on the CSIRO's blog placed the blame for the bulk of extinctions on invasive species—cats! foxes—but other causes include human overpopulation, habitat loss, hunting, climate change and disease. Prof. Woinarski blamed the death of the Christmas Island pipistrelle on government inaction, as its steep rate of population decline was known for decades: "That was one we really should have been able to save."

Governmental inaction was also documented in a January report on Australia's Environment Protection and Biodiversity Conservation (EPBC) Act, an Act that was meant to protect threatened species and their habitats. Prepared by independent reviewer Prof. Graeme Samuel, the report found that the Act was ineffective, our environment was in steep decline, and the legislation was "not fit to address current or future environmental challenges". The Act has failed to ensure compliance or enforce regulations designed to protect endangered species and native ecosystems. Nineteen Australian ecosystems were declared "collapsing" in a February report, in need of urgent action, and we have already lost nearly 90% of temperate woodlands and 75% of rainforests.

The Australian government must act now to save Australian ecosystems and species. It's as simple as that. — *Jodie Lea Martire*
iucnredlist.org/statistics

Exclusive! A secret camera image from the Federal Government's latest brainstorming session on the climate crisis.

Image: Jan Otto/iStockPhoto

Federal government continues ostrich strategy on Paris Agreement

The UNFCC recently urged non-responsive governments, especially those in the G7 and the OECD—yep, that's Australia—to make a genuine commitment to cutting greenhouse-gas emissions.

After evaluating the promises (known formally as "nationally determined contributions", or NDCs) made by 75 countries under the Paris Agreement, and assessing the countries' current reporting compared to the goals of 1.5 °C and 2 °C global temperature increases, the interim NDC Synthesis Report found that reporting countries are "nowhere close" to achieving our shared climate goals. At current rates, there is only a slim chance that emissions will even peak before 2030: they're projected to shrink by a miniscule 0.5% from 2010 emissions, rather than the 45% needed to hit 1.5 °C.

At the Powering Past Coal Alliance Summit a few days later, UN chief António Guterres pushed the world's rich nations to present

01

Born to be Wyld

One of the great things about electric drivetrains is that as they're so compact, they allow for all manner of interesting vehicle designs. This can be seen in the "chopper" design of the Wyld electric scooter from Electric Mobility Solutions.

The Wyld is an urban commuter scooter with distinctive styling. It features 18" wheels with disk brakes, and is pushed along by a 2000 W/95 Nm motor, which allows it to climb hills with a maximum incline of 30°.

The removable 60 V, 30 Ah lithium-ion battery gives a maximum range of 90 km, while maximum speed is 50 km/h (remember, it's classed as a scooter). The scooter's maximum load is 200 kg, so it can easily handle two adults. The scooter itself weighs just 82 kg.

Other features include a horn, front LED lights, front and rear turning indicators, brake lights and an LCD screen. There's no rapid charging available, and charging from empty to full can take up to five hours.

Being classed as a scooter, the Wyld has varying license requirements depending on state, so check with your local road transport authority for their requirements.

Available in black, red and blue, the Wyld costs $4199 (including GST).

Contact:
Electric Mobility Solutions, ph: 0417 623 769
info@emos.com.au
emos.com.au

02

Light the night with solar

Go into any hardware store and you will find dozens of types of cheap solar light. What almost all have in common is that they are low grade junk with a very short lifespan.

The myGarden solar wall lights from Philips are a step above the average solar light. Available in a basic unit and a model with an infrared sensor, they feature aluminium bodies for robustness and long life (aluminium is also vastly more recyclable than plastic) with a polycarbonate diffuser (because true transparent aluminium hasn't been invented yet and aluminium oxynitride costs a fortune).

Other features include an integrated solar panel, a replaceable battery (standard 18650 sized lithium) and a 100 lumen LED array that runs for up to six hour per night, depending on how much sun there was that day.

The standard model can be operated manually, or automatically at night. The sensor model can also be set to operate when it detects a person within range, conserving battery and allowing the light to operate all night.

The lamps come with a two-year warranty on the unit and five-year warranty on the LED and LED driver. RRPs are $79.95 for the standard unit and $99.95 for the sensor model, but are currently on sale for less.

Contact:
Reduction Revolution
ph:1800 611 322
reductionrevolution.com.au

03

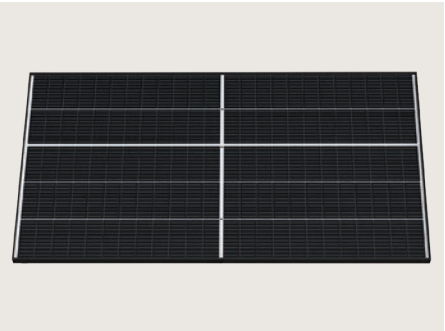

High output, compact solar panels

As PVs have increased in output power, they have also increased in size and weight, making them more difficult for installers to handle.

Trina has sought to address this issue with the 400 watt Vertex S modules. Based on their larger commercial-grade modules, and using technologies to minimise the space between cells, the Vertex S modules measure 1.75 m by 1.09 m and weigh 21 kg, giving them a maximum efficiency of 21.1%.

The panels have high snow load ratings of 6000 Pa for the front of the panel and a 4000 Pa rear wind load rating, making them suitable for high-wind locations.

Another option is with the encapsulant, which is EVA on most panels. The Vertex S is available with either EVA or polyolefin elastomer (POE), which Trina states is better for hot, humid environments.

Vertex S panels come with a 15-year warranty as standard, which can be extended to 25 years upon request. They will be available in Australia in all states and territories from April 2021.

RRP is POA as part of a system quote.

Contact:
Trina Solar
trinasolar.com/au

Keeping an eye on the BAL: how sites affect bushfire risk

Architect Julie de Jong, who works in one of the most fire-prone parts of Australia, shares her experience planning buildings for bushfire resilience.

The reason I became a BPAD (Bushfire Planning and Design) practitioner is to work on designing and building dwellings for bushfire protection in Western Australia, where over 90% of the state is mapped as fire prone. Our practice H+H Architects has offices in three different regions of Western Australia, so we design buildings to suit all kinds of landscape settings, in a similar way to how we would design for energy efficiency and sustainability in different climate areas.

The Australian Standard *Construction of Buildings in Bushfire Prone Areas* (AS3959) covers the bushfire safety requirements of building in a bushfire prone area, and is a "Deemed to Satisfy" solution (a minimum standard) under the National Construction Code (NCC) for construction in bushfire prone areas. AS3959 is mostly about improving the ability of buildings to withstand the impact of fire, and also about giving a measure of protection to the occupants until the fire front passes. It also provides the methodology for working out a future home's Bushfire Attack Level (BAL)—see boxed text for details on how these work.

Bush Heritage station: how site planning helps bushfire protection

There are factors on a proposed site that we can't change, but there are some factors that we can. A BAL is determined by three main factors: slope, vegetation and separation/distance. It can sometimes be reduced by considering these site conditions and working out if the building could be better positioned. While a slope can't be altered, we can consider how close we are to the slope, and whether we go upslope or downslope; both these factors can impact your BAL.

One project in the Fitz-Stirling region of Western Australia demonstrates how site planning can alter the BAL for a proposed structure and improve bushfire protection. We designed an off-grid field station (with a residential component) for Bush Heritage at the 1042 ha Red Moort Reserve, which is 150 km north-east of Albany, on Noongar country. The ecological research facility is for environmental workers to monitor threatened species in the Western Australian wilderness from the field.

The building is set in a natural clearing to reduce the impact on existing vegetation types, as Bush Heritage didn't want to go against their environmental principles and bulldoze land to build their new field station. In this location the facility has been built to a BAL 12.5 standard, despite being in what was quite a high-risk area for bushfires when

BAL-busting: how does the Bushfire Attack Level work?

If you have any sort of connection to a bushfire-prone area, you've probably heard of the Bushfire Attack Level (BAL). It's basically a numerical measurement of the severity of a building's exposure to various source of danger in a fire, measured in increments of radiant heat (expressed in kW/m²) and expressed in six ascending levels of danger. A building's level is used to assess what, if any, special construction measures need to be taken to protect it in the case of a fire.

These levels are as follows; the descriptions thereof are our own summaries, adapted from information published on bushfireprone.com.au, rather than official wording:

- **Low** (<12.5): Insufficient danger to require any specific measures.
- **BAL 12.5** (12.5-18.9): Danger of ember attack.
- **BAL 19** (19-28.9): Increased danger of ember attack; also danger from burning debris.
- **BAL 29** (29-39.9): Increased danger of embers and burning debris, along with increasing heat flux.
- **BAL 40** (40+): Extreme danger of embers and burning debris, along with increasing heat flux and likelihood of flame exposure.
- **BAL FZ**: Direct exposure to flames (in addition to BAL 40 dangers). ("FZ" is an acronym for "fire zone".)

The actual construction measures required by each BAL are too extensive and complex to summarise here. If you need detailed information, the required measures are set out in detail in AS 3959, which is available for free until June 2021 (see "Resources" overleaf).

Sources: bushfireprone.com.au, AS 3959

A star (rating) is born

Rob McLeod and Olivia Harris ask why it's so maddeningly difficult to get a straight answer to a simple question.

Buying or renting a home with higher energy efficiency is a good investment: it means you will be healthier, more comfortable, pay lower energy bills, and emit less greenhouse gases in your daily life.

Unfortunately, *finding* such a home isn't always that simple.

If you're buying a fridge, it's easy: you just compare the star ratings. But if you are scanning real estate listings, either for a place to rent or for a home to buy, you'll be lucky to find any information at all about energy-saving features—let alone a clear energy performance rating that you can use to compare one home to another.

So just how hard is it for buyers and renters to get the information they need to make a good choice? Last year, Environment Victoria decided to find out. Volunteers from the organisation attended over 300 open-for-inspections as "secret shoppers" and asked real estate agents some simple questions about the energy performance of the homes on display.

The results were confronting. 91% of agents were unable to cite an energy rating for the home. Less than half could name an energy efficiency feature of the home, and less than a third could answer the question of whether it had insulation. Only 1% could state the energy running costs to heat and cool the home. Unsurprisingly, results were slightly better for homes for sale than homes for lease—renters rarely end up better off than homebuyers in any given situation—but information was sorely lacking across the board.

One of the core questions about Australia's energy policy has long been whether the market can deliver change on the scale we need to respond effectively to the climate emergency. But when it comes to the energy efficiency of homes, we aren't even letting the market mechanism work. How can the invisible hand push one way or the other when consumers don't even have access to the basic information they need to make a decision?

There is a simple step available to fix this problem: governments could require the mandatory disclosure of energy ratings for all homes when they are sold or leased. This system is already in place in the ACT, along with many countries overseas—and the next few years might be the best opportunity yet to make it a reality across Australia.

Voluntary home ratings in Australia

Anyone selling or leasing a home in Australia is perfectly entitled to advertise its energy rating—and there are very good reasons to do so.

Evidence from overseas suggests that, where listed, higher energy efficiency ratings lead to higher prices. In a review of relevant studies, the majority found a price premium existed, with an average range of 5% to 10% for high energy efficiency[1]. Higher energy efficiency clearly provides interest to buyers who know they will save on energy bills. What's more, a home with a high rating or certification is eligible for discounted mortgage rates through programs such as Bank Australia's Clean Energy Home Loans, providing further incentive for buyers to choose energy efficient homes.

Pictured: a) a sustainable house—possibly!—and b) stars.

Nonetheless, disclosure of home energy ratings in advertisements is entirely voluntary. Everywhere in Australia but the ACT, there is no obligation for sellers to provide any information on ratings or the presence (or absence) of energy-saving features.

Making the disclosure of home energy efficiency ratings mandatory—as it currently is for many appliances—would fix many of the problems that put consumers at a disadvantage.

First, and most clearly: the current system isn't working. As the Environment Victoria

Taking charge.

Long-time Renew contributor John Hermans looks back on 40 years of living off -grid: an adventure that started with a single car battery, has grown to encompass an entire battery room—and may well end in a wall of wrecked Teslas.

DIY: solar hot water

Having purchased a disused farmhouse, Barry Lambert had all the ingredients for rural bliss—except hot water. He explains how the sun came to the rescue.

In 2002, I purchased a disused country farm in Monaro Plains. The old farmhouse needed significant renovation to make it liveable, and the need for hot water was paramount.

It took a number of months to complete the project, and during this time we took advantage of the EverHot combustion stove wetback hot water system.

This worked well but required the stove to be operational every second day during the winter months, and every fourth or fifth day during the summer. In the early days the stove would have been going all year 24/7!

There had to be a better way. So what about... an evacuated tube solar array for hot water?

Barry fitting the tubes to the collector.

Crunching the numbers

The house's long axis is north to south, and the north face roof pitch is about 34°. The storage tank has a capacity of approximately 220 L and is situated above the kitchen. This allowed easy plumbing to the wetback in the Everhot. The disadvantage here is that this location is only 7 m from the section of the north facing roof where the proposed solar array is to be installed.

Also, as I wanted to take advantage of a thermosiphon effect, the output of the array manifold had to be lower than the hot water inlet on the storage tank. This ruled out the use of standard length (approx 1700 mm) evacuated tubes, because they would have left the outlet of the manifold way above the entry point on the storage tank, which would have required a circulation pump in continuous operation.

The dimensions to be crunched were:

- Height of storage tank inlet: 630 mm;
- Roof angle: 34°;
- Height of array out: 315 mm; and
- Length of pipe run: 7000 mm.

Juggling all of these figures results in a positive gradient of approximately 3° from array manifold outlet to the inlet of the storage tank.

At the stage of design there was little available in short-evacuated tubes here in Australia, but a web search revealed a Chinese company, Misole, who had a suitable product.

The next question was: how many tubes would be needed? Looking at the specifications for a standard system, it looked as if 15 1700 mm tubes—a total tube length of 25.5 m—would be suitable for my 220 L storage tank. If I opted for 600 mm tubes instead, I'd need 42 tubes to give me an equivalent length. As a system package from Misole was a ten-tube system, I settled on a slight compromise of four of these.

The only other hardware needed was 14 m of 19 mm copper tubing, a handful of compression fittings, a one-way valve, and a couple of taps so that the solar system could be isolated.

With all bits on site, the system was assembled on the ground and transferred in stages to the roof. The pipes were cut into the existing system around the storage tank. The project was completed in about 10 days.

DIY: solar space heating

Alan Leenearts' one-man quest for sustainability returns to the pages of *Renew*. This time, he's built a solar space heater—and wants you to do the same!

This is an article on solar space heating—the primary heat source for my three-bedroom, two-bathroom home in suburban Melbourne. It is an active system, in that it is purpose-built to collect and distribute hot air in a house with otherwise poor/moderate northerly orientation.

This latest solar heater is a vast improvement on the original unglazed version, which I described in *Renew 123*—and even that simple system reduced my heating requirements by 75%. The old system came about after my roof tiles were replaced with Colorbond, and in *Renew 126* I described how I used the old roof tiles to create a thermal mass air conditioner.

However, in that issue I also mentioned I had since installed a new solar heating system that no longer uses the open roof cavity, and performs much better than the old system—and promised to describe it in a future issue. So, eight years later, I'm making good on that promise!

As I write, it is a very dull, overcast March day in Melbourne; the temperature is 17°C, and overnight it got down to 9°C. The new heater has been working since 8:30 am, and an hour later, the house is comfortably warm at 22°C.

A view of the entire collector, which consists of polycarbonate sheeting on battens on the carport roof (both flat and sloping roof). The collector is north-facing, and with the north window shades (not yet removed for winter) and the dull grey day, the air exit temp in these conditions was 35°C.

All images: Alan Leenaerts

INTO THE E-WASTES

Jodie Lea Martire ventures into the "global tsunami" of e-waste as part of our ongoing series on recycling industries.

Case study: Green Collect

In 2019, social enterprise Green Collect diverted over 1m items from Greater Melbourne tips, with 60% of them reused and 35% broken down into recyclable materials. Around 20% of the total—around 2000 kg per month—was electrical goods and IT equipment: computers, printers, thumb drives, kettles, faxes, printers, floppy disks, cords... Basically, anything that has ever used power in an office.

Green Collect's business looks simple: it collects waste, mostly from office clean-ups and relocations, and saves 95% of it from landfill. Instead of hiring a skip, corporates, councils and government departments throw their unwanted items into Green Collect's boxes or cages. Everything is accepted except hazardous waste, and it is all removed, redistributed and repurposed.

It's what happens next that makes Green Collect a particularly interesting case study. As CEO Sally Quinn explains, "When we started over 15 years ago the focus was on recycling. Our work now prioritises maximising value through facilitating reuse, repair and remanufacture in ways that create significant environmental and social impact. We're dedicated to creating a circular economy ... creating new green jobs in sorting, testing, teardown and resale."

Those green jobs involve plenty of hard work. That work begins when the cages arrive at the warehouse: workers sort the material into almost 100 commodity categories. The three-person electricals team tests every powered item, even "extraordinarily exotic electrical items from the 1970s", and tag the roughly 50% that work as being functional. The team researches the item, looking into how it works, whether there's a market for it—and sometimes, first of all, what the item actually *is*. (Remember: none of these things come with manuals!) Working items are donated to community groups or sold through Green Collect's shops or their online channels (booming since Covid, by the way).


Image: Green Collect

Look, we *could* pretend to be sad to see a copy of Green Day's *Dookie* being consigned to the bin, but who'd be fooled?

Devices that can't be given the spark of life are then "pre-processed" so that environmentally sound local companies can do the "technical recycling" (i.e. running everything through a chipper and accessing the valuable elements). Cords are cut off, items dismantled into components, and pieces are sorted into two categories:

- "high-grade" e-waste: e.g. circuit boards that contain lots of precious metals; or
- "low-grade" e-waste: e.g. a memory stick: mostly aluminium, batteries, and wiring.

It's with unusual items like electronic whiteboards that Green Collect's adaptability in repurposing waste comes to the fore. Unlike other e-waste collectors, they're willing to take a whiteboard, crack out the small electrical part, cut off the cord, and recycle the rest of it (mostly steel). Quinn explains why: "We work with businesses and households to continually minimise waste and extract the highest value from tricky items that would usually go to landfill. [Our] key area of impact is in reducing workplace waste ... [via] new approaches that reduce the demand for natural resources."

Dominique Emery from Green Collect explains that the "most frustrating things" for this goal of reducing waste are cheap, single-use electricals—"the bottom of electrical innovation", the product of a linear economy that pays far too little attention to quality design for long-term use and reuse. As Emery says, "We want really well-designed systems and processes to keep items in circulation for as long as possible. What if landfill was just not an option?" — *Jodie Lea Martire*

Note: Renew used Green Collect's services when we moved office in January.

Stop watching the grass grow

Oliver Lees examines the case for an alternative lawn.

Like all facets of Australian life, our urban environments have undergone considerable change in keeping up with the demands of an increasingly sustainable society. Once considered an eyesore, solar panels are now widely accepted as an ethical energy alternative, with more than 2 m residential setups on rooftops across the country.

Similarly, people have reconsidered how they manage their waste: nearly all Australians recycle, whilst roughly a third of the population have developed at-home composting. The modern home has undergone a revolution of its own, with homeowners opting for energy-efficient light bulbs and water-saving shower heads.

But there is one feature of the Australian home that has stood the test of time, remaining a ubiquitous sight across the country—the common grass lawn.

Grass is a mainstay of Australian gardens, and is the default option in both front and back yards. It certainly has its virtues: as well as being familiar and relatively manageable, a well-kept grass lawn looks great. As many have gravitated closer toward cities—and therefore forfeited their ability to own a larger chunk of land—these green spaces are perhaps valued more now than ever before.

But what if there was a way to get even more out of your limited garden space? What if, instead of a yard that was purely green in colour, you had an area that could be cultivated into actual abundance?

Is there a problem with grass?

Maria Ignatieva, a professor of urban ecology at the University of Western Australia, has done extensive research into the historical proliferation of lawns dating back to the Middle Ages, and now works as an advisor within the turf industry. Professor Ingatieva's research has found that these spaces became a symbol of upper-class European society, demonstrating an element of prestige and power. The popularity of lawnscapes took off in the early 18th century, as Lancelot "Capability" Brown redefined the English landscape, styling gardens with dazzlingly well-kept lawns. In private homes as well as public spaces, a neat stretch of grass allowed humanity to demonstrate its ability to tame nature in a controlled manner.

Australia's culture of lawn cultivation is an heirloom of our colonial history, just as it is in New Zealand and the United States. But lawns were also highly symbolic in the early days of settler society in Australia, as newly arrived colonists attempted to replicate the classic English garden in the less-forgiving climate of this great southern land. Like other popular elements of imperial style, a grass lawn was considered in opposition to the uncivilised wildness; a manicured expanse of grass was a symbol of some sort of victory over the harsh, indigenous Australian scrub.

> *Pollen is windborne, [so] you can't really avoid it … the best thing you can do is try and minimise [the amount of] it around your house—and you can do that by cutting back on your grass space.*

It's not just the aesthetic that's been imported, either: the most commonly used grasses in Australian backyards (buffalo, kikuyu and couch grass) were all introduced from other parts of the world. Whilst each type of grass is unique in their blade structure and suitable environments, they function the same in that each of them create that classic green carpet look many people crave.

Clearly, introduced plants are a problem in a fragile ecosystem like that of Australia—but the fact that so many lawn grasses are non-native isn't the only reason to consider alternatives. From an ecological perspective, grass lawns can stunt the biodiversity of the soil. Common grasses are considered a monoculture and in some circumstances can actively detract from the productivity of the garden. With its wiry blades and long underground roots, couch grass is a common suspect that is known to pop up and invade garden beds.

Those with pollen allergies will understand how difficult those hayfever months can be, and landscape gardener Matt Fiddes, owner of Melbourne-based Blume Landscapes, explains that a little-known advantage of getting rid of your lawn is that it helps reduce pollen count.

Efficiency on the cards

Scorecard assessor Lucinda Flynn writes about Victoria's Residential Efficiency Scorecard program, and its potential to be used nationwide.

The Residential Efficiency Scorecard—now known simply as "Scorecard"—has earned plenty of accolades in Victoria over the last few years, and as a result, it could well be set for a national rollout. As a Scorecard assessor, I can attest that it is a robust and dependable tool for energy assessors—while for homeowners, it offers user-friendly and pertinent information about how to reduce energy bills and increase thermal comfort, in both winter and summer.

Homes in the Victorian regional centre of Castlemaine.

Image: Akash Dhurbarry/Unsplash

What is the Residential Efficiency Scorecard?

Basically, the Scorecard is an energy efficiency assessment tool that is designed to give a cost-efficiency rating for residential homes. It is unique in that it was developed to provide a rating for *existing* homes, rather than new builds. This means that every home, whether it was built in the 1800s or the 2000s, can get a Scorecard rating.

The Scorecard was developed by the Victorian Government and has been in use for about four years. Over this time, regular improvements—accompanied by robust training, examination, and auditing procedures for assessors—have resulted in the Scorecard being recognised widely as an exceptionally reliable and useful rating tool.

In fact, the Scorecard has developed such a good reputation that this year, all states and territories have agreed to pilot it as a national tool. This is really good news, and the Scorecard will be a fantastic resource for the nation's householders, because it can provide information about the likely cost of running a specific home—whether that's a home you currently live in, or one you're considering buying or renting.

> *The Scorecard ... can provide information about the likely cost of running a specific home—whether that's a home you currently live in, or one you're considering buying or renting.*

With constantly rising energy costs, the importance of this for the average person cannot be underestimated. [*It also helps to resolve the difficulty prospective buyers and renters often have accessing efficiency information—see page 22 for an in-depth discussion of that subject – Ed.*]

A personal perspective

I've used the Scorecard as my home energy assessment tool over the last three years, and I've been extremely satisfied with it. From my perspective, householders deserve every bit of information they can get about what things affect their energy bills—as well as their comfort—in both winter and summer.

The Scorecard provides this information, and it also gives practical and relevant

Illustration: Renew

There's something almost invisible lurking in our oceans—and it could well be a ticking pollution time bomb. Kim Thomson investigates.

POWERING INTO THE GARDEN

A GARDEN TOOL BUYERS GUIDE

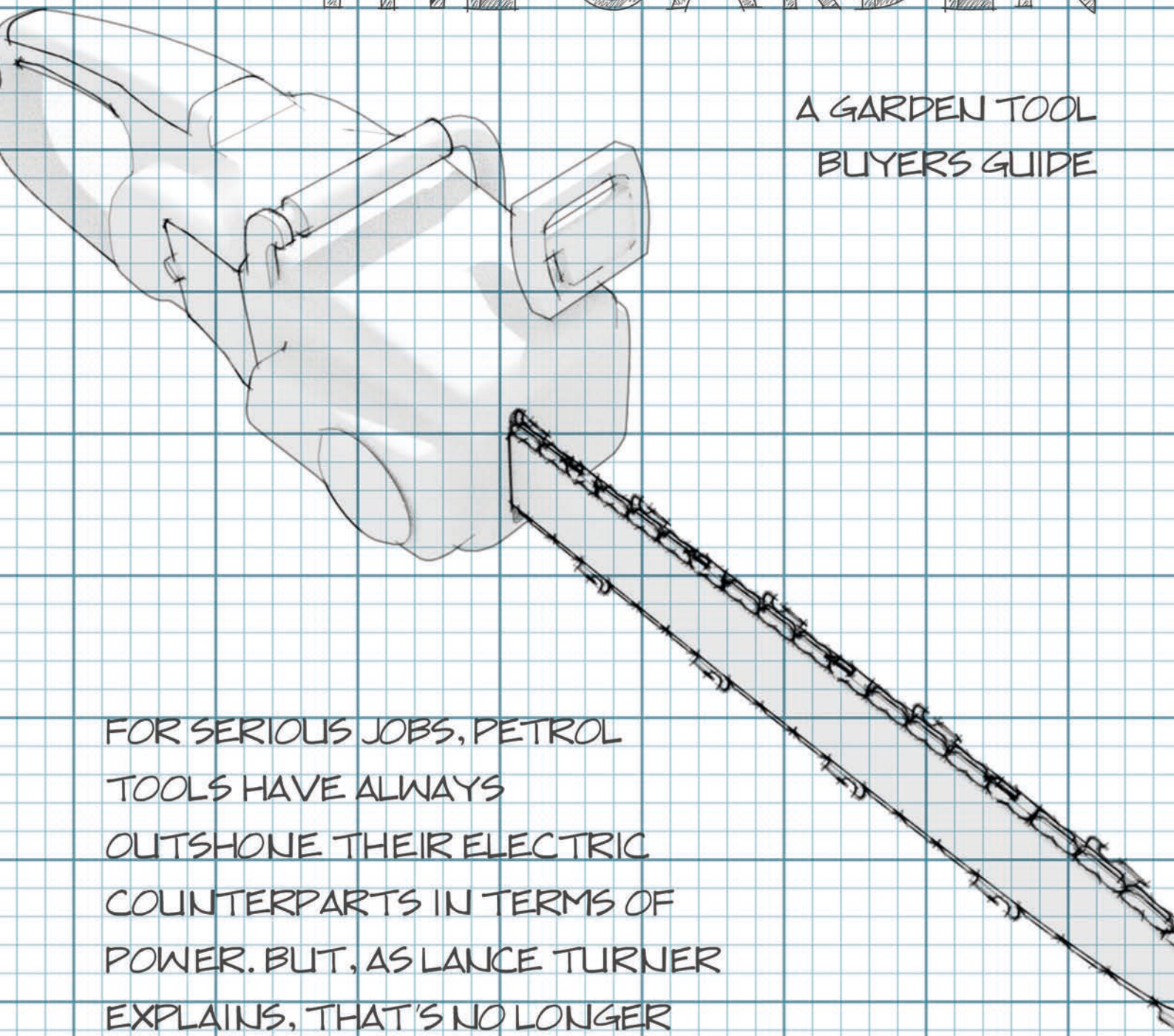

FOR SERIOUS JOBS, PETROL TOOLS HAVE ALWAYS OUTSHONE THEIR ELECTRIC COUNTERPARTS IN TERMS OF POWER. BUT, AS LANCE TURNER EXPLAINS, THAT'S NO LONGER THE CASE.

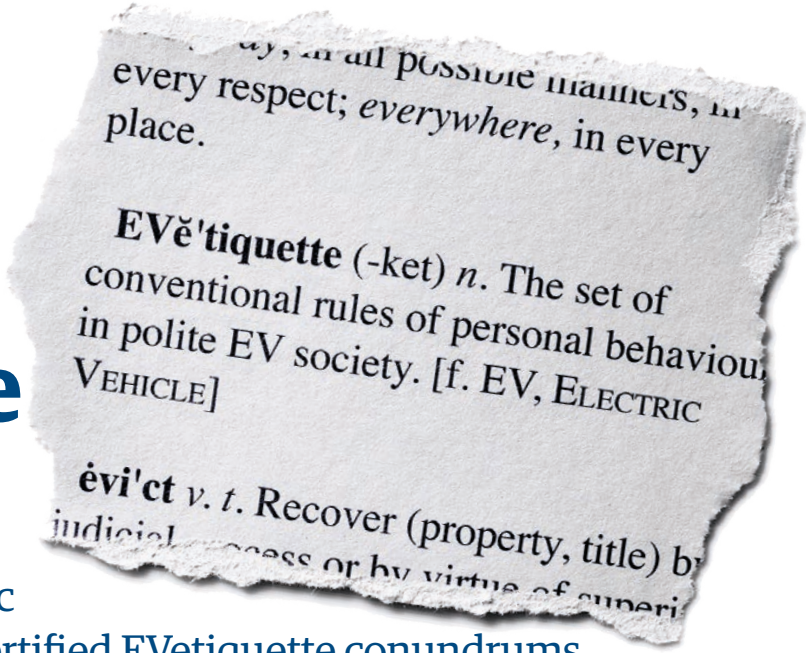

EVetiquette: the essential guide

As we move (slowly) into an EV-centric world, Bryce Gaton looks into some certified EVetiquette conundrums.

When it comes to new social settings (and technologies), sets of commonly accepted norms evolve to smooth the inevitable friction of how to share that space. The same applies to the new paradigm of EV charging ... as it presumably would once have done in relation to feeding and watering horses at the local hostelry.

In this article I will explore how EV driving and charging changes the norms of ICE driving, look at some of the evolving EVetiquette surrounding these, plus make some suggestions for some evolving EV issues that may soon need addressing.

AUTHOR:
Bryce Gaton
Bryce is a member of the Melbourne branch of Renew and a committee member of the Australian Electric Vehicle Association.

Figure 1: A Tritium DC charger display—note the 80% or maximum button.

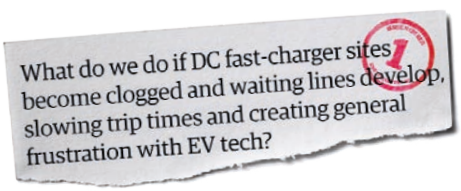

Background:

DC chargers provide quick charging solutions (soon to be around 10 to 15 minutes for an 80% charge in the next generation of EVs), but they will always be in 'short' supply as, unlike petrol stations, around 90% of EV charging takes place elsewhere. That 'elsewhere' being AC chargers at home, in the workplace, car parks etc. Whilst AC charging is slower, charging time becomes irrelevant when charging overnight, during work hours or whilst shopping.

To be economic for DC charging networks to develop and make a fair income, it would seem reasonable that there will always be fewer DC charging sites than petrol stations. The key to EV charging is that the petrol station model will die with the ICE (internal combustion engine) age and EV charging will becoming regarded as just like charging a mobile phone. DC chargers should be therefore be left to long-distance drivers, plus those who do not have readily available AC charging options...and the odd person who forgot to charge their EV overnight.

EVetiquette:

1. In short: only use DC fast-chargers if you really need to.
2. Charge to 80% only if at all possible. (To protect the battery, DC charging speeds ramp down significantly after reaching 80%. This results in the DC charging time from 80 to 100% being roughly equivalent to the 0 to 80% time!). See Figure 1 for an example of a DC charger control panel and note the 80%/maximum charge button.
3. If charging is not time-critical, (for instance, for flat dwelling EV owners) charge at less busy times. By the way: it is likely as DC charging networks evolve that their pricing will reflect peak and off-peak times.

So... what's my REAL range?

One of the first questions a new EV owner asks is "What's its range?". But as Bryce Gaton explains, that can be a difficult question to answer.

Range estimates for electric vehicles (EVs)—and for that matter, vehicles in general—have long been the source of frustration and contention. For the same EV, the published driving range can vary by 30% or more, depending on the country in which it is sold.

Given that it is unlikely that drivers are all that different, this means some of those estimates are either way too low or way too high! (Table 1 demonstrates how dramatically these figures differ for several popular EV models.)

So which estimates are right, and which are wrong? Perhaps more importantly, which ones bear the closest relationship to what an average driver can expect in real life? By the end of this article, you'll be able to assess the accuracy of EV range figures, and also work out what sort of range to expect when you actually take your EV out onto the road.

It depends on who you ask...

First, although it might sometimes appear that way, government-mandated range estimates—as provided by manufacturers and websites—are not plucked from thin air.

In fact, they're derived through one of three international testing standards, and the question of which one has been used in providing the range figure for your EV is the single most important consideration in assessing that figure's accuracy.

The three tests are:

- NEDC (New European Driving Cycle);
- WLTP (Worldwide Harmonised Light Vehicle Test Procedure); and
- US EPA (Unites States Environmental Protection Agency).

These three test cycles vary in the proportion of city and country driving included, and also in defined climatic conditions. The European test cycles—both the NEDC and the WLTP—tend naturally to favour inner city and suburban driving, whilst the US EPA tests include more outer suburban and highway driving trips.

NEDC is the older of the European standards, and became notorious for producing range figures that were around 30% above distances actually achievable in real life—particularly so towards the end of its reign. This was partly to do with the NEDC test cycle becoming too settled, as well as being too based in theory: the test is carried out in a laboratory and uses outdated theoretical driving models (developed in the 1970s!) rather than actual real-world data.

Together, these two factors led to auto manufacturers becoming quite adept at gaming the system by producing cars optimised to the tests. (And don't forget Volkswagen's outright cheating of the test

Vehicle	NEDC	WLTP	US EPA
Nissan Leaf 40kWh	315	285	243
Hyundai Kona 64kWh	557	484	413
BMW i3	359	310	245
Renault Zoe	403	300	(Not sold in USA)

Table 1: Comparison of test cycle range estimates for vehicles sold in multiple countries. All figures are in km.